Smith Meter® microFlow.net™ Liquid

Bulletin SS06047 Issue/Rev. 0.3 (8/15)

FMC Technologies

We put you first.
And keep you ahead.

ELECTRONIC FLOW COMPUTER SYSTEM

The Smith Meter microFlow.net Liquid is a microprocessor-based instrument with Ethernet capability. It is designed to monitor and control single product, singlemeter flow. The unit can operate either as a stand-alone instrument or be part of system where it communicates with an automation or SCADA system.

FEATURES

- computer
- Ethernet communications port
- Modbus protocol (Modicon Modbus RTU)
- Three mulit-drop EIA-485 or EIA-232 communications ports
- Continuous monitoring of critical functions
- User configurable inputs and outputs
- Programmable language/messages
- Event logging/audit trail
- Configurable batch report
- Automatic temperature correction
- API tables from LPG to crude oil
- Coefficient of expansion for chemicals
- Explosion-proof
- Display backed-up per OIML
- Three security levels
- Boolean/Algebraic expressions
- Additization of metered products
- Pulse Security Level B
- Adjustable Display Contrast
- Sampler Control Support
- ASTM 1250-04 and API MPMS Chapter 11.1-2004 compliant
- Sediment and water monitor interface
- Ultra6 Liquid Ultrasonic Interface
- FMC Technologies Promass Coriolis Meter Communications

microFlow.net Liquid

APPLICATIONS

Applications include any size pipeline for single product, single meter flow. This self contained EXP unit continuously computes, totalizes, and displays IV, GV, GST, NSV, and Mass. The microFlow.net also offers run time displays, which provide all (rate, batch, temp, etc.) critical flow information.

STANDARD FEATURES

Temperature Compensation

The temperature compensation feature provides the customer with the ability to compensate for variance in temperature from a reference temperature. This feature is used with an RTD input or a temperature transducer and, excluding the accuracy of the fluid temperature measurement, will exactly match the proper volume correction factor of ASTM-D-1250-04 and API MPMS CH 11.1-2004 tables as noted below, over the fluid temperature range of -58°F to 302°F (-50°C to 150°C). The following API tables can be programmed in the microFlow.net: 5A, 5B, 5D, 6A, 6B, 6C, 6D, 23A, 23B, 23D, 23E, 24, 24A, 24B, 24D, 24E, 53A, 53B, 53D, 53E, 54, 54A, 54B, 54C, 54D, 54E, 59A, 59B, 59D, 59E, 60A, 60B, 60D, 60E, BRIA, BRIP, and BR2P.

Pressure Compensation

PPressure compensation provides the customer with the ability to compensate the volume of product delivered at varying pressures per API Tables 11.2.1 and 11.2.2, using a 4-20 mA pressure transducer input. This feature also contains real-time control functions for maintaining system pressures at the meter to a minimally-acceptable, user-definable level (pressure transducer not included). Pressure compensation is particularly useful for light products, such as LPG, where the compressibility factor varies greatly with different pressures. greatly with different pressures.

Density Correction

The density correction feature provides the customer with the ability to correct the volume of product delivered at varying densities. Density can be obtained through a 4-20 mA input.

Metered Injectors, Piston Injectors, and Smart Additives

The microFlow.net has been designed to provide maximum flexibility when it comes to additive control. The unit is capable of handling metered injectors, piston injectors and smart additives simultaneously.

The microFlow.net is capable of controlling four additive injector systems. (One metered injector and three piston or Smart or zero metered injectors and four piston or Smart.)

The microFlow.net controls the additive solenoids of metered injectors to precisely inject additive into the main product. It monitors the pulses of the additive meter and controls the amount of additive, based on the incoming pulses from the additive meter and main product meter.

Additive monitoring provides the capability for the microFlow.net to monitor feedback from the piston injectors of the additive products. The microFlow.net monitors the injector feedback switches for a change of state and counts the errors and alarms if no change is detected within the cycle or a period of time, depending on how the unit is programmed. The microFlow.net will totalize additive volume based on confirmation signals and a programmable volume per cycle. The totalized volume will print on the emulated load ticket printed on the printer output.

For Smart additives, the firmware has also been designed with a Master/Slave type of communications, with the microFlow.net being the master and the Additive Injector System being the slave. The microFlow.net constantly interrogates the Additive Injector System for a change in status. The microFlow.net can be operated with communications control over the Smart Additive Injector System or with communication/pulse control. When the microFlow.net has communication control over the Additive System, it will constantly monitor the Additive System for its status, poll the additive totals, and signal the system when to inject additive – all through the communications line.

The microFlow.net communications package has also been designed with a pass-through communications The microFlow.net communications package has also been designed with a pass-through communications mode. In this mode of operation the supervisory computer can talk to the Additive Injector System through communication lines run to the microFlow.net and from the microFlow.net to the Additive Injector System(s).

Dual Pulse Security

TThis feature provides continuous monitoring and error indication alarm of pulse transmission for the meter per API Petroleum Measurement Standard, Chapter 5.5, Level B, and Institute of Petroleum Standard, IP 252/76, Part XIII, Section 1, Level B.

Sampler Operation

The microFlow.net will support a sampler by providing a discrete I/O output signal which will produce a pulse of programmable width each time a sample is to be taken. The sampling frequency will be programmable by either volume or time. The parameters used to configure the sampler are in the General Purpose directory. The sampler can be enabled/disabled through the keypad in the program mode.

Boolean and Algebraic Processing

The microFlow.net provides the customer the flexibility to set-up inputs and outputs for tasks that are not standard in the unit. Through Boolean processing, relays can be turned on and off through equations and events set-up by the customer. For example, a relay is required to close when flow rate is zero. This can be set-up using Boolean processing and does not require special software from the manufacturer.

Algebraic processing is also an area the customer can use to do simple mathematical calculations not in the unit. These calculations can then be used on the configurable reports or delivery display for the current batch being run by the unit.

Communications

The microFlow.net is equipped with three standard programmable communication ports that can be set up to be either EIA-232 or EIA-485 compatible communication ports, with baud rates up to 38,400 bps. In addition to these three communication ports an Ethernet port is available which supports HTTP, Modbus and Smith Meter minicomputer host over TCP/IP protocols.

Shared Printing

Shared printing allows multiple microLoads to generate reports on a single printer. A single microLoad.net can be configured to act as a "print server" (host) and all other microLoads to be "shared printers" (clients). Once the client microLoad.nets are configured as shared printers, they will have their communication, transmit, and receive lines tied together and connected to a single comm port on the print server. When a shared printer microLoad is done with a transaction and print is pressed on its keypad, the report is sent via communications to the host, where it will be printed.

Communications

The microLoad.net is equipped with three standard programmable communication ports that can be set up to be either EIA-232 or EIA-485 compatible communication ports, with baud rates up to 38,400 bps. In addition to these three communication ports an Ethernet port is available which supports FTP, HTTP, and Modbus/TCP protocols.

HARDWARE OPTIONS

OIML Display

The microFlow.net is designed to have two display options. The standard display option will operate until the power is lost and then will go blank. The OIML display option is the same display but when the power is lost, the display will maintain the data for reading by an operator for up to fifteen minutes.

SPECIFICATIONS

Accuracy

Calculated Accuracy: The gross at standard temperature to gross volume ratio, excluding the accuracy of fluid temperature measurement, will exactly match the proper volume correction factor or ASTM-D-1250-04 over fluid temperature range of -58°F to +302°F (-50°C to +150°C).

Temperature Measurement Accuracy: Fluid Temperature is measured to within +/- 0.72°F (+/-0.4°C) over the fluid temperature of -328°F to 572°F(-200°C to 300°C). Fluid temperature is measured to within +/-0.45°F (+/-0.25°C) over the fluid temperature range of 32°F to 572°F (0°C to 300°C)

Stability: 0.1°F(0.06°C)/year

Flow Totalization within one pulse of input frequency.

Electrical Inputs

AC Instrument Input Power

Dual Voltage input 115 or 230 VAC via Switch, 50/60 Hz

Power consumption: Approximately 9 watts.

Power Interruption Tolerance: Interruption of power greater than 0.05 seconds (typical) will cause an orderly shut-down of the microFlow.net and the control valve will be immediately signaled to close.

Digital (Meter Signal) Pulse Inputs

Type: Optically-isolated solid-state voltage sensors

Quantity: Two

Input Voltage Range: 5 to 28 Vdc compatible

Pickup Voltage: 5 Vdc minimum

Drop-Out Voltage: 1 Vdc maximum

Current at Maximum Voltage: 20 mA maximum

Input Level Duration: 83 µS minimum

Digital Control Inputs

Type: Optically-isolated solid-state voltage sensors

Quantity: Three

Input Voltage Range: 5 to 28 VDC compatible

Pickup Voltage: 5 VDC minimum

Drop-Out Voltage: 1 VDC maximum

Current at Maximum Voltage: 20 mA maximum

Input Level Duration: 120 mSec minimum

Batch Reset: Input must be held on high voltage for 300ms to ensure a reset state

Analog Inputs

Type: 20-bit analog to digital converters

Function: One RTD, one 4-20 mA

Temperature (RTD – Resistance Temperature Device)

Type: Four-wire 100Ω platinum resistance temperature detector (PRTD)

PRTD Temperature Coefficient @ 32°F to be: 0.00214 Ω/Ω/°F (0.00385 Ω/Ω/°C)

Temperature Range: -148°F to +572°F (-100°C to +300°C)

Temperature Measurement Accuracy: ±0.72°F (±0.4°C) over the specified range

Current (4-20 mA) Input

Type: Two-wire, 4-20 mA current loop receiver, programmable as to function.

Span Adjustment: Program adjustable

Input Burden: 50Ω

Accuracy: ±0.025% of range

Resolution: One part in 1,048,576

Voltage Drop: Two volts maximum

Sampling Rate: One Sample/300 mSec minimum.

Electrical Outputs

DC Power

12 VDC +/-5%, 180 mA maximum, short circuited protected.

AC Digital Outputs

Type: Optically isolated solid-state output user-programmable as to function

Quantity: Four

Load Voltage Range: 90 – 280 VAC (rms) 48 – 63 Hz

Steady-State Load Current Range: 0.05A (rms) minimum to 0.50 amp (rms) maximum into an inductive load.

Leakage Current at Maximum Voltage Rating: 2.5 mA maximum at 240 VAC.

On-State Voltage Drop: 2.0 VAC at maximum load

DC Digital Outputs

Type: Optically-isolated solid-state output user-programmable as to function

Quantity: Two

Switch Blocking Voltage: 30 VDC maximum

Load Current: 150 mA maximum with 0.6 volt drop

Power down normally open

Pulse Output

Type: Optically-isolated solid state open-collector output. Pulser output units are program selectable through the microLoad.net keypad or communications

Switch Blocking Voltage (Switch off): 30 VDC maximum

Load Current (Switch On): 10 mA with 0.6 volts drop

Frequency Range: 0 to 3000Hz

Duty Cycle: 50/50 (on/off)

Environmental

Ambient Operating Temperature

-13°F to 140°F (-25°C to +60°C)

Humidity

5 to 95% with condensation

Hazardous Location Approvals

UL/CUL

Class I, Groups C & D

Class I, Zone 1, AEx d ib IIB T6

UL Enclosure 4X, CSA Enclosure 4

ATEX/IEC Ex

Ex d ib IIB T6 Gb (U_m = 250V)

IP 65 Tamb = -25°C to +60°C

DEMKO 04 ATEX 0403315X

IEC Ex UL 04.0007X

ELECTROMAGNETIC COMPATIBILITY

Complies with the European Community EMC Directive (CE Mark) Requirements

COMMUNICATIONS

Number of ports: Three plus Ethernet

Configuration: EIA-485 Four-wire or two wire multi-drop network with optional termination resistor or EIA-232 three-wire communications link

Data Rate: Programmable asynchronous data (Baud) rate from 2,400 to 38,400 bps

Data Format: Fixed at one start bit, one stop bit, eight data bits, and no parity

Line Protocol: Full duplex, no echo character

Data Structure: ASCII character oriented, modeled after ISO Standard 1155

Protocol: Smith Meter ASCII LRC, Smith Meter ASCII CR, Smith Meter ASCII binary

Ethernet: 10/100 Base TRJ-45

8 or 10 pin UTP (unshielded twisted pair) connector

MICROFLOW.NET – MODELING

ML - XP - MFL - 1

Model Designation

Hardware Option

1 - STD
2 - OIML Display Option

Housing

XP - (Explosion proof/Flame proof)

Firmware

MFL - microFlow.net

MICROFLOW.NET – DIMENSIONS

FMC Technologies

We put you first.
And keep you ahead.

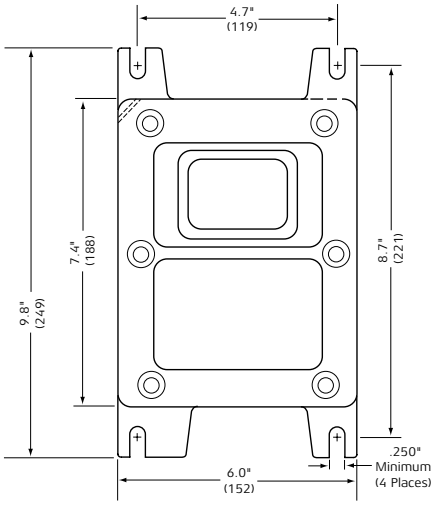

Conduit Entrances

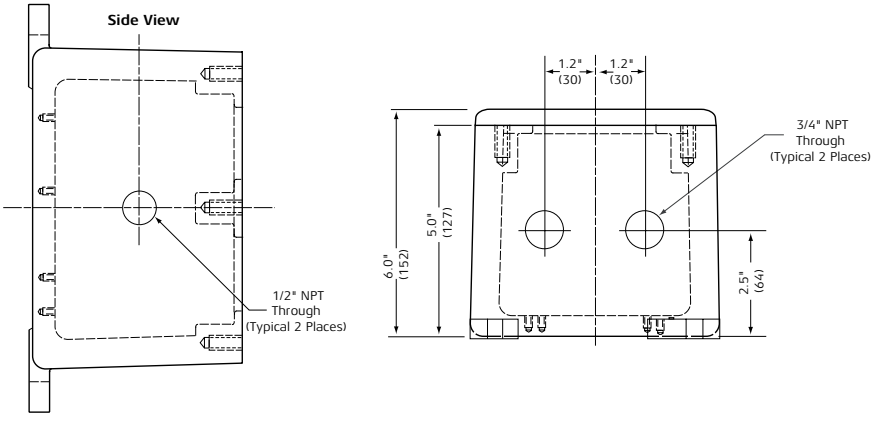

Explosion-Proof Housing

Note: Dimensions – Inches to the nearest tenth (millimetres to the nearest whole mm), each independently dimensioned from respective engineering drawings.

Revisions included in SS06047 Issue/Rev. 0.3 (8/15):
Page 4: Updated Environmental and Hazardous Location Approvals sections. Page 4: Updated Electromagnetic Compatibility information. Page 5: Modeling code updated under Housing.
The specifications contained herein are subject to change without notice and any user of said specifications should verify from the manufacturer that the specifications are currently in effect. Otherwise, the manufacturer assumes no responsibility for the use of specifications which may have been changed and are no longer in effect. Contact information is subject to change. For the most current contact information, visit our website at www.fmctechnologies.com/measurementsolutions and click on the "Contact Us" link in the left-hand column.

www.fmctechnologies.com/measurementsolutions

FMC Technologies
Measurement Solutions, Inc.
500 North Sam Houston Parkway West,
Suite 100
Houston, Texas 77067 USA
P:+1 281.260.2190

USA Operation
1602 Wagner Avenue
Erie, Pennsylvania 16510 USA
P:+1 814.898.5000

Germany Operation
Smith Meter GmbH
Regentstrasse 1
25474 Ellerbek, Germany
P:+49 4101 304.0

